Product datasheet

KOMBIC 100 DOWNLIGHT

K11SQ2540WF830NWW

KOMBIC 100 SQ 2500 IP43 WW WFL WH/WH

Description:

Square recessed downlight model KOMBIC 100 SQ by Lamp brand. Reflector made of recycled polycarbonate R-PC FR WHITE TM non-brominated flame retardant additive. Flammability grade V0 according to UL94. Matte metallic interior reflector and frame in white finish. Heatsink made of die-cast aluminium. COB LED, colour temperature 3000K with CR80. Luminaire with electronic wiring included. Insolation Class II. Lifetime: 50.000 L70 B10. With IP43 degree of protection. Group 0 photobiological safety. With Wide Flood optics to achieve a controlled light distribution and low UGR<19.

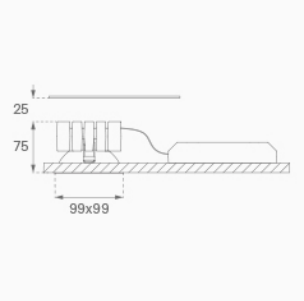

Finish: Matte white RAL 9010

Weight: 382 g

Installation: Recessed

TECHNICAL SPECIFICATIONS:

Light output:	1.742 lm	**ºK :**	3000
Plum:	19,8W	**CRI :**	80
Efficacy:	88 lm/w	**MacAdam:**	3
UGR:	<19	**Power Supply:**	220-240V 50/60Hz
Type:	COB	**Gear:**	Electronic
LED Lifetime:	50.000 L70 B10 (Ta=25ºC)		
Power:	18W		

Light output tolerance +/- 10%

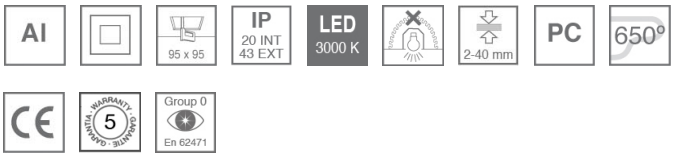

CUSTOM MADE OPTIONS:

KOMBIC 100 DOWNLIGHT

K11SQ2540WF830NWW **KOMBIC 100 SQ 2500 IP43 WW WFL WH/WH**

PHOTOMETRIC DATA :

K11SQ2540WF830NWW

η = 100%

Imax = 1238 cd/klm

UTE: 1,00A

CIE: 96 100 100 100 100

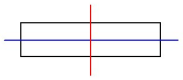

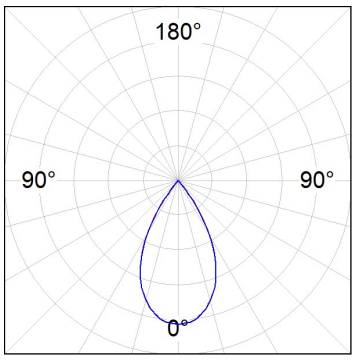

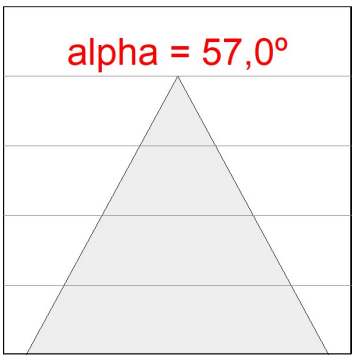

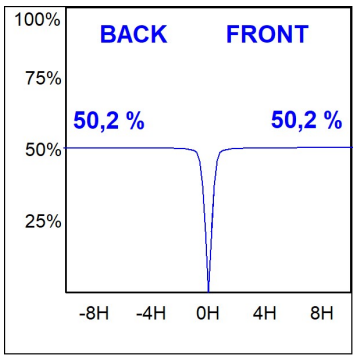

LAMP reserves the right to change the technical specifications of their products. These changes will allow the continual improvement of the products and will also ensure the conformity to current legal changes. Updated information is always available in our website www.lamp.es

Data according to regulations 2019/2020/EU and 2019/2015/EU