Product datasheet

KOMBIC 100 DOWNLIGHT

K11SQ2040OP840DRW

KOMBIC 100 SQ 2000 IP43 NW OPAL DA BR/WH

Description:

Square recessed downlight model KOMBIC 100 SQ by Lamp brand. Reflector made of recycled polycarbonate R-PC FR WHITE TM non-brominated flame retardant additive. Flammability grade V0 according to UL94. Shiny metalized interior reflector and frame in white finish and optical film. Heatsink made of die-cast aluminium. COB LED, colour temperature 4000K with CRI80. Luminaire with electronic wiring Dali included. Insolation Class II. Lifetime: 50.000 L80 B10. With IP43 degree of protection. Group 0 photobiological safety.

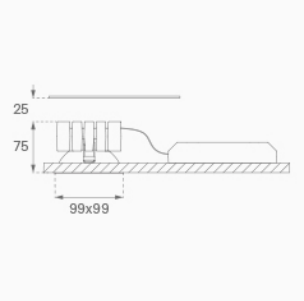

Finish: BRILLIANT METALLIC POLYCARBONATE

Weight: 392 g

Installation: Recessed

TECHNICAL SPECIFICATIONS:

Light output:	1.574 lm	**ºK :**	4000
Plum:	13,4W	**CRI :**	80
Efficacy:	117,5 lm/w	**MacAdam:**	3
Type:	COB	**Power Supply:**	220-240V 50/60Hz
LED Lifetime:	50.000 L80 B10 (Ta=25ºC)	**Gear:**	Adjustable DALI
Power:	12W		

Light output tolerance +/- 10%

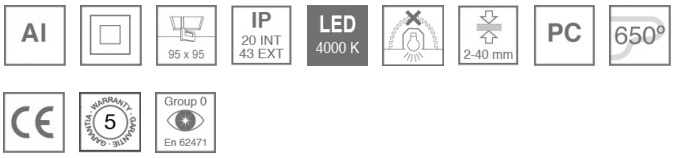

CUSTOM MADE OPTIONS:

KOMBIC 100 DOWNLIGHT

K11SQ2040OP840DRW **KOMBIC 100 SQ 2000 IP43 NW OPAL DA BR/WH**

PHOTOMETRIC DATA :

K11SQ2040OP840NRW
η = 101%
Imax = 893 cd/klm
UTE: 1,01A
CIE: 85 100 100 100 101

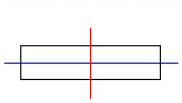

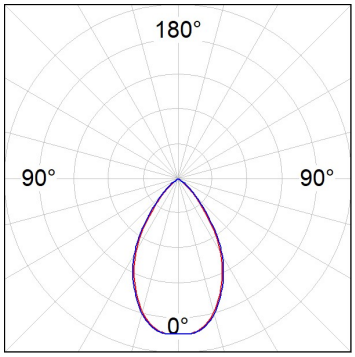

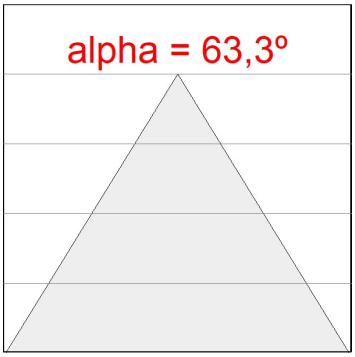

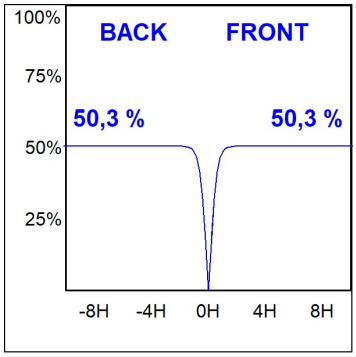

LAMP reserves the right to change the technical specifications of their products. These changes will allow the continual improvement of the products and will also ensure the conformity to current legal changes. Updated information is always available in our website www.lamp.es

Data according to regulations 2019/2020/EU and 2019/2015/EU